专注分离 服务环境



无锡源申环保设备有限公司
Wuxi Yosun Environmental Protection Equipment Co.,Ltd.
电话TEL:+86-0510-85264060
传真FAX:+86-0510-83157565
邮箱Email:service@wxyosun.com
网址Web:(英文)https://wxyosun.com
(中文)https://www.wxyshb.com

污水处理固液分离设备

产品手册

PRODUCT CATALOG

YOSUN ENVIRONMENTAL

无锡源申环保设备有限公司

Wuxi Yosun Environmental Protection Equipment Co.,Ltd.

科技改变环境 技术创造价值

第四版

源申环保 YOSUN ENVIRONMENTAL

目录 Contents



目录

CONTENTS

公司简介 …… 01
Company Profile

产品介绍 …… 05
Product Introduction

溶气气浮 …… 05
Dissolved Air Flotation

高效斜板沉淀池 …… 11
Lamella Clarifier

ZXG中心传动悬挂式刮泥机 …… 17
ZXG Center Drive Suspended Sludge Scraper

DL叠螺式污泥脱水机 …… 19
DL Volute Sludge Dewatering Machine

加药装置 …… 23
Chemical Dosing System



源申环保
Yosun Environmental

源申环保于2011年成立于无锡，是污水处理行业专业的固液分离设备供应商。经过多年的发展,我们已经拥有一支集研发、设计、制造、服务于一体的专业团队。我们的产品远销全球30多个国家和地区,应用于市政、化工、印染、造纸、新能源、制药、景观水体等各个领域。在国内外,我们跟环保领域的设计公司、研发机构、高校、使用单位等展开了包含售卖、租赁、代理、托管运营等多种合作模式。

Wuxi Yosun Environmental Protection Equipment Co,Ltd was established in 2011 which is a professional supplier of solid-liquid separation equipments in the sewage treatment field. After years of development, we have a set research and development, design, manufacturing, services in one of the professional team. Our products are exported to more than 30 countries and regions around the world, and are used in various fields such as municipal, chemical industry, paper making, new energy,pharmacy, landscape. Except that, At home and abroad, we cooperate with design companies, research and development institutions, universities and users in the field of environmental protection through different cooperation models like sales, leasing, agency, custody operation etc.

公司简介
Company Profile

企业文化
Corporate Culture

使命：致力于为社会创造价值，实现绿色可持续发展。

Mission: Create value for society and achieve green and sustainable development.

愿景：成为技术领先的著名环保设备制造与服务企业。

Vision: To become an excellent enterprise in the field of environmental protection with technology and service as the core.

价值观：诚信、创新、合作共赢。

Values: integrity, innovation, win-win cooperation.

工厂内景
The Factory's Interior





发展历程
Development History

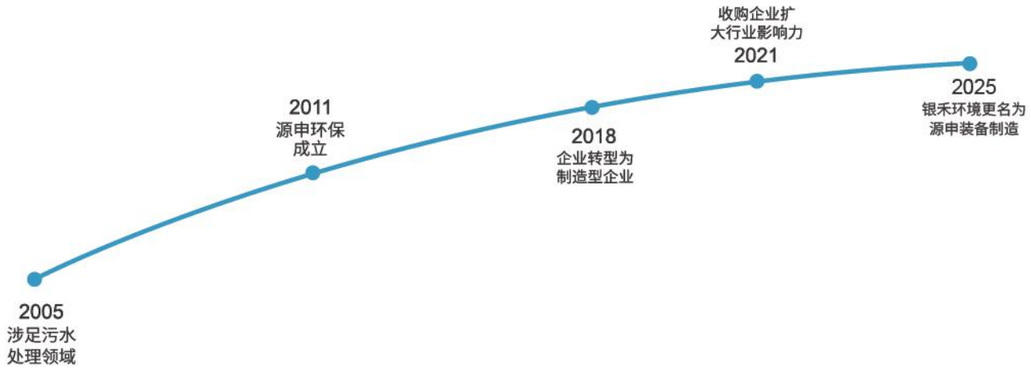

2005年　涉足污水处理领域。
In 2005, Yosun entered the field of sewage treatment.

2011年　源申环保成立。
In 2011, Yosun was established.

2013年　全新一代设备在市场得到广泛应用。
In 2013, Yosun new generation equipment has been widely used in the market.

2018年　入股银禾环境，转型为制造型企业。
In 2018, Yosun became a shareholder in Yinhe Environment.

2021年　收购银禾环境，银禾环境成为源申环保的全资子公司。
In 2021, Yinhe was taken over by Yosun.

2025年　银禾环境更名为无锡源申环保装备制造有限公司
In 2025, Yinhe was renamed as Wuxi Yosun Environmental Protection Equipment Manufacturing Co,.Ltd

资质证书
Qualification Certificate



合作伙伴
Cooperative Partner

源申环保
YOSUN ENVIRONMENTAL

Professional supplier of solid liquid separator for waste water treatment

溶气气浮
Dissolved Air Flotation

Professional design　Exquisite craftsmanship　Focus on separating

产品简介

溶气气浮设备是一款通过设备产生的微气泡和污水中的悬浮物接触后，使悬浮物的密度低于水的密度，从而使悬浮物迅速上浮至污水的表面，达到去除水中悬浮物（包含油脂类等不溶于水的细小颗粒）的固液分离设备。可应用在预处理降低后端工艺负荷、除油、中水回用、景观水循环、深度处理、尾水除磷等工艺段，是去除悬浮物、降低BOD\COD总磷等指标的关键核心设备。



Dissolved Air Flotation

Dissolved air flotation is a solid liquid separator that many bubbles in DAF contact with the solids-making their density lower than the water and then they will float up to the surface so that suspended solids of water including oil&grease without dissolving in water can be reduced. DAF can be used in pretreatment, water reuse, deeptreatment, phosphorus removal from tail water etc., which is the critical equipment to reduce the ss,cod,bod and total phosphorus etc.









源申环保
YOSUN ENVIRONMENTAL

Professional supplier of solid liquid separator for waste water treatment

Professional design　Exquisite craftsmanship　Focus on separating

构造以及工作过程

溶气气浮设备通过循环泵取处理后的出水作为循环水，进入溶气罐，同时在溶气罐内加入压缩空气，在溶气罐内进行高效的气水混合，混合后饱含空气的溶气水被送入气浮接触区，再通过释放器的瞬时释压，产生大量的纳米级微气泡，微气泡迅速附着至混凝好的悬浮物上，悬浮物的密度逐渐小于水的密度，自动上浮至表面，设备底部留下干净的水，在底部通过出水装置排放至清水区，清水区的一部分水继续作为设备的循环水使用，其余排放至下一道工序。上浮至表面的浮渣通过刮渣机刮至浮渣池进一步处理。

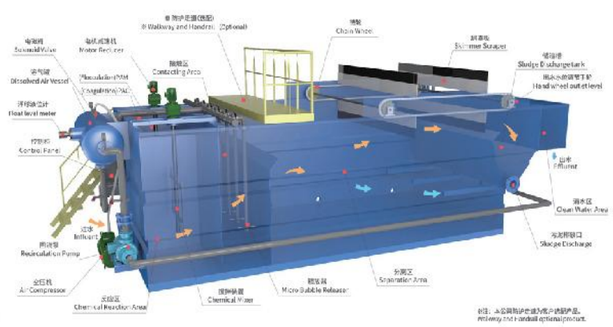

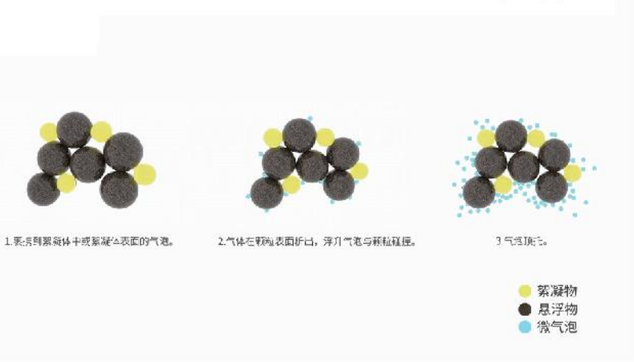

Working Process

Dissolved air flotation takes the treated effluent through the circulating pump as circulating water which will enter the air compressure tank. The circulating water mixed with air,called air-saturated dissolved air water flows into releasers and large number of nano-scale micro-bubbles are generated via releasers, and the micro-bubbles quickly attach to the coagulated suspended matter. When the density of suspended matter is gradually lower than that of water, it automatically rises to the surface. Clean water at the bottom of DAF, is discharged to next step process to treat. The scum floating to the surface is scraped to the sludge tank by scrapers for further treatment.

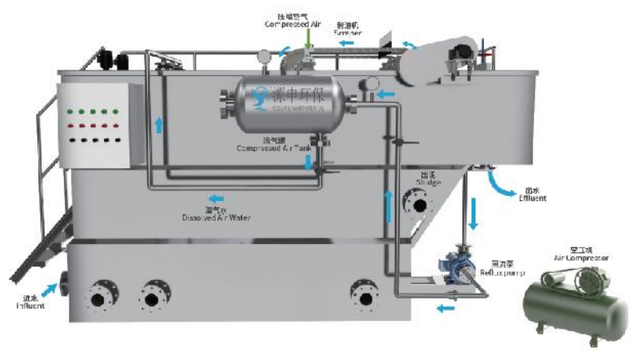

源申环保
YOSUN ENVIRONMENTAL

Professional supplier of solid liquid separator for waste water treatment

溶气气浮
Dissolved Air Flotation

Professional design　Exquisite craftsmanship　Focus on separating

产品优势

❶ 微气泡粒径10-30μm，水中停留时间更久。
❷ 表面负荷高达10-30m^3/(m^2·h)，占地更小。
❸ 气水混合效率高达95%以上。
❹ 成套设备供货，现场安装简便。
❺ 集成度高，操作运行高效简洁。
❻ 智能进气，设备更节能。
❼ 顶入式释放器，实现检修不停机。
❽ 可调式液位系统和刮渣系统，可控浮渣含水率。
❾ 更专业的配套设计及建议。









Product Advantages

❶ The particle size of microbubbles is 10-30μm, and the residence time in water is longer.
❷ Surface load up to 10-30m^3/(m^2·h) compact style to save the space.
❸ Gas-water mixing efficiency is higher than 95%.
❹ Complete system and easy to install.
❺ High integration, efficient and simple operation.
❻ Intelligent air suction, more energy saving equipment.
❼ Top - in release, realizing non-stop maintenance.
❽ Adjustable liquid level system and slag scraping system can control the moisture content of scum.
❾ Professional supporting design and suggestions.

源申环保
YOSUN ENVIRONMENTAL

Professional supplier of solid liquid separator for waste water treatment

Professional design　Exquisite craftsmanship　Focus on separating

应用领域

❶ 石油化工、屠宰、食品（除油、降SS、降COD）。
❷ 印染、纺织、制革（降SS、脱色、降COD）。
❸ 造纸、制药（降SS、降COD）。
❹ 尾水提标（除磷、降SS）。
❺ 中水回用（降SS、除油）。
❻ 河道、景观水（降SS、降浊度）。
❼ 新能源、贵金属回收（降SS、除氟）。
❽ 垃圾渗滤液（减轻后端生化负荷）。
❾ 表面处理（除重金属、降SS）。

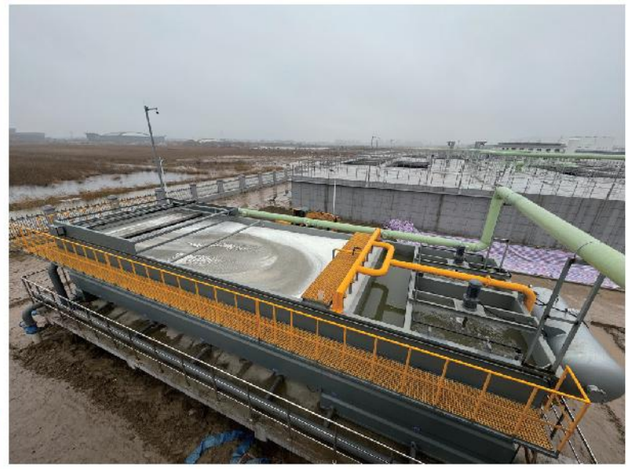





Application Fields

❶ Petrochemical, slaughtering, food.
(Oil removal, SS reduction, COD reduction)
❷ Printing and dyeing, textile, tanning.
(Reduce SS, decolorization and COD)
❸ Paper making, pharmaceutical.
(Reduce SS and COD)
❹ Final discharged water further improvment.
(Phosphorus removal, SS reduction)
❺ Reuse of reclaimed water.
(Reduce SS and remove oil)
❻ River, landscape water.
(Reduce SS and turbidity)
❼ New energy, precious metal recovery.
(Reduce SS and remove fluorine)
❽ Landfill leachate.
(Reduce back-end biochemical load)
❾ Surface treatment.
(Heavy metals, SS reduction)

溶气气浮技术参数表

RDAF Model Selection Table:

型号 Model	处理量 Capacity (m^3/h)	管口连接 Piping Connection 进水口 Inlet	出水口 Outlet	排渣口 Sludge	放空口 Vent	尺寸 Dimension (mm) L	L1	L2	W	W1	H
RDAF-003	3	DN50	DN50	DN100	DN50	4300	3300	500	800	700	1900
RDAF-005	5	DN80	DN80	DN100	DN50	4700	3500	500	1000	700	1960
RDAF-010	10	DN100	DN100	DN100	DN80	5700	4500	500	1200	700	1960
RDAF-015	15	DN125	DN100	DN150	DN80	6200	5000	500	1500	700	1960
RDAF-020	20	DN150	DN150	DN150	DN80	6200	5000	600	1800	700	1960
RDAF-030	30	DN150	DN150	DN150	DN80	7200	6000	700	2000	700	2050
RDAF-040	40	DN200	DN150	DN150	DN80	8200	7000	900	2200	700	2050
RDAF-050	50	DN200	DN150	DN150	DN80	8200	7000	1000	2700	700	2050
RDAF-060	60	DN250	DN200	DN150	DN80	9200	8000	1000	2800	700	2050
RDAF-080	80	DN250	DN250	DN150	DN100	11200	10000	1200	3200	700	2050
RDAF-100	100	DN300	DN250	DN150	DN100	11700	10500	1200	3600	700	2050
RDAF-125	125	DN350	DN350	DN250	DN100	13200	12000	2200	3600	700	2050
RDAF-150	150	DN350	DN350	DN250	DN100	14200	13000	2200	3600	700	2050

型号 Model	处理量 Capacity (m^3/h)	设备重量 Weight (Kg)	工作重量 Operating Weight (kg)	功率 Power 回流泵 Reflux Pump (kw)	空压机 Air Compressor (kw)	刮渣机 Skimmer (kw)	反应电机 chemical reaction tank (kw)	
RDAF-003	3	1500	5000	0.75	0.55	0.12	0.25	0.12
RDAF-005	5	1600	7000	1.1	0.55	0.12	0.25	0.12
RDAF-010	10	2000	12000	1.5	0.75	0.12	0.25	0.12
RDAF-015	15	2200	18000	2.2	0.75	0.12	0.25	0.12
RDAF-020	20	3000	22000	2.2	0.75	0.12	0.55	0.25
RDAF-030	30	3800	32000	3	1.5	0.12	0.55	0.25
RDAF-040	40	5000	45000	5.5	1.5	0.12	0.55	0.25
RDAF-050	50	5500	55000	7.5	1.5	0.12	0.55	0.25
RDAF-060	60	6000	66000	7.5	1.5	0.12	0.75	0.37
RDAF-080	80	7500	100000	11	1.5	0.12	0.75	0.37
RDAF-100	100	9000	110000	15	2.2	0.18	0.75	0.37
RDAF-125	125	10000	120000	15	2.2	0.18	1.5	0.75
RDAF-150	150	11000	130000	15	2.2	0.18	2.2	1.1

参数表说明 ▶
Selection Table Note

样本参数及图片仅供参考，源申公司保留持续改进的权利，所有参数以双方确认为准。如有任何技术问题，请与我们联系。
The Parameters and Pictures are only for reference. Yosun reserves all rights.All parameters are subject to the confirmation of both parties. More technical questions, please feel free to contact us.

溶气气浮外形图

RDAF Outline Dimension

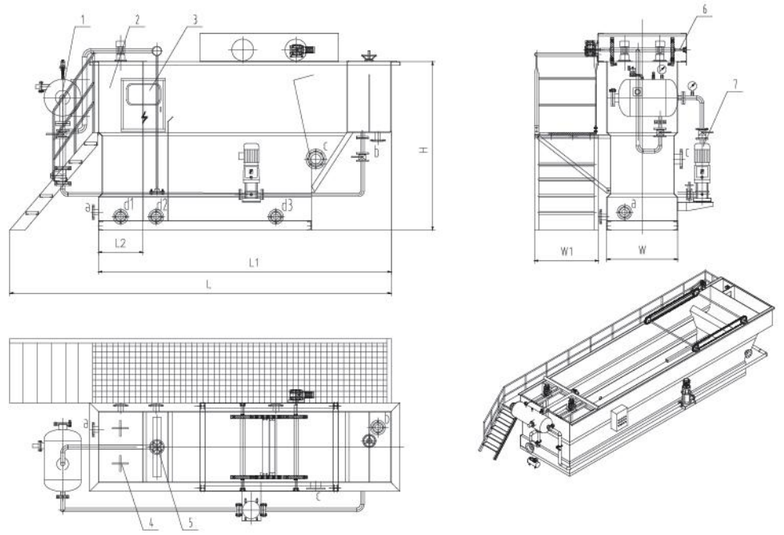

气浮外形图
Dissolved air flotation outline drawing

1. 溶气系统 1.Air dissolving system	2. 池体 2.Main Tank	3. 电控柜 3.Electric control cabinet	4. 反应装置 4.Chemical reaction tank
5. 释放装置 5.Micro-bubble releaser	6. 刮沫装置 6.Skimmer system	7. 回流管路 1.Returning line	a-污水进水管 1.a-Raw water inlet pipe
b-清水排放管 1.b-Clean water outlet pipe	c-浮渣排放管 1.c-Foam discharge pipe	d1-反应区放空管 1.Reaction area vent pipe	d2-接触区放空管 1.Vent tube in contact area
d3-分离区放空管 1.Separate area vent pipe			

溶气气浮耗材表

DAF Accessories list:

配件名称 Parts Name	配件图片 Accessories Pictures	配件名称 Parts Name	配件图片 Accessories Pictures
链条 Chain		浮球液位开关 Float level switch	
释放器 Releaser		压力表 Pressure Gauge	
橡胶刮板 Rubber Scraper		链轮 Chain wheel	

源申环保
YOSUN ENVIRONMENTAL

Professional supplier of solid liquid separator for waste water treatment

兰美拉斜板沉淀池
Lamella Clarifier

Professional design　Exquisite craftsmanship　Focus on separating

产品简介

兰美拉高效斜板沉淀池区别于常规沉淀池，以独特的布水方式和斜板结构，使沉降效率大幅提升，无论是表面负荷还是使用过程中的工作强度以及使用寿命，均是普通沉淀池的几倍。兰美拉斜板沉淀池凭借其卓越性能，使得其在污水处理的固液分类段占据了一席之地。并且随着大家对设备的要求越来越高，结构空间也越来越紧凑，更多的用户选择使用兰美拉沉淀池替代常规沉淀池。



Lamella Clarifier

Lamella clarifier, different from ordinary clarifier, improves the settling area by means of its unique water distribution manner and plate structure. No matter the surface loading or the service life, both are several times that of ordinary clarifier. Lamella clarifier has made it occupy a place in the solid-liquid classification section of sewage treatment with its excellent performance and is chosen by amount of users instead of ordinary clarifier because of its high efficieny and compact structure.







源申环保
YOSUN ENVIRONMENTAL

Professional supplier of solid liquid separator for waste water treatment

Professional design　Exquisite craftsmanship　Focus on separating

构造以及工作过程

絮凝好的污水进入兰美拉斜板沉淀池后，经过布水机构，污水被完全均匀分布至沉淀池的中底部，污水的流速迅速下降，由平流状态转为缓慢上升状态。缓慢上升的污水“触碰”到斜板后污水中的悬浮物被斜板“截停”，不断上升的污水使得斜板截停的污泥越来越多，比重变大后下沉至泥斗中，由刮泥机将泥斗中的污泥刮至排泥口排出。缓慢上升的上清液由穿孔式集水槽收集后排至下一道工序。

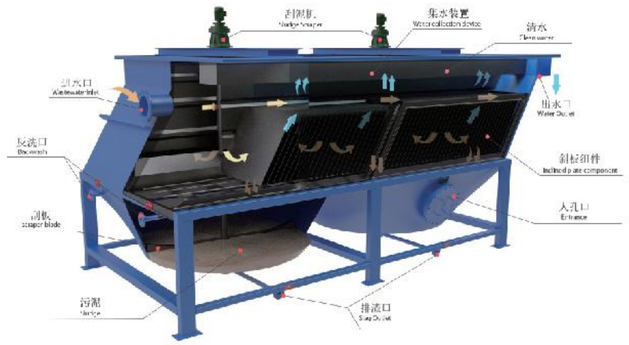



斜板组件(Inclined Plate)

Working Process

The flocculated water flowing into the lamella clarifier, is totally distributed to the bottom of the tank through the distribution unit and the flow rate drops rapidly and changes from advection to slow rise. After the slowly rising sewage "touches" the inclined plate, the suspended solids in the sewage are "cut off" by the inclined plate. The rising sewage makes the sludge cut off by the inclined plate more and more, and the proportion becomes larger, and then it sinks into the sludge pit, and the sludge in the sludge pit is scraped by the scraper to the sludge outlet for discharge.

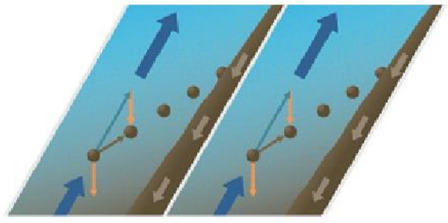

未处理水、清水流向
flow direction of untreated water/clear water.

固体颗粒的流向
flow path of a solid particle.

固体颗粒的流向
vectors of flow velocity and sink speed.

污泥流向
flow direction of sludge.

源申环保
YOSUN ENVIRONMENTAL

Professional supplier of solid liquid separator for waste water treatment

兰美拉斜板沉淀池
Lamella Clarifier

Professional design　Exquisite craftsmanship　Focus on separating

产品优势

1. 表面负荷是传统沉淀池的2-4倍。
2. 独特的布水结构大，易于沉淀。
3. 斜板对沉淀物起到再絮凝作用。
4. 斜板材质、间距可定制，适应更多种工况。
5. 稳定的斜板结构，不坍塌，维修简便。
6. 可实现在线反冲洗，定期清理斜板积泥。
7. 配套刮泥机，解决底部排泥不畅的问题。








Product Advantages

1. The surface load is 2-4 times that of the traditional clarifier.
2. Unique water distribution structure. Re-flocculation of sediment of lamella plate.
3. Customized inclined plate material and spacing to adapt to more working conditions.
4. Stable inclined plate structure, no collapse, simple maintenance.
5. Realizing online backwashing and regularly cleaning the sludge on the inclined plates.
6. Equipped with mud scraper to solve the problem of poor sludge discharge at the bottom.

源申环保
YOSUN ENVIRONMENTAL

Professional supplier of solid liquid separator for waste water treatment

Professional design　Exquisite craftsmanship　Focus on separating

应用场景

1. 沉砂池：在沉砂池应用沉淀池可以去除水中的无机杂质。
2. 初沉池：在初沉池应用沉淀池可以去除水中的悬浮物及其他密度大于一的固体物。
3. 二沉池：在二沉池应用沉淀池可以去除生物处理出水中的活性污泥。
4. 浓缩池：在浓缩池应用沉淀池可以分离污泥中的水分，使污泥得到浓缩。
5. 深度处理：在深度处理领域对二沉池出水、加絮凝剂混凝后应用沉淀池可以去除水中的悬浮物。


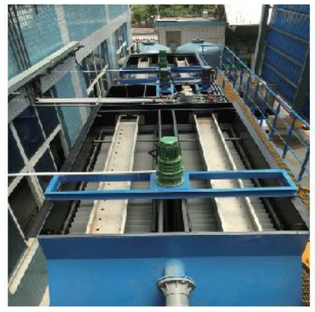




Application Fields

1. Grit Chamber: Lamella replacing it can remove inorganic impurities in water.
2. Primary settling tank: Lamella replacing it can remove ss or others that density is greater than 1.
3. Secondary settling tank: Lamella replacing it can remove the active sludge in biological treatment.
4. Concentration tank: Lamella replacing it can separate the water from sludge to thicken the sludge.
5. Advanced treatment: Lamella used in advanced treatment can remove the suspended solids in water.

沉淀池技术参数表
Lamella Clarifier Model Selection Table:

型号 Model	水量 Capacity (m^3/h)	管口连接 Piping Connection 进水口 Inlet	出水口 Outlet	污泥口 Sludge	反洗口 Backwash	尺寸 Dimension (mm) L	W	H	功率 Power(kw) 刮泥机 Sludge Scraper
XBG-005	5	DN80	DN80	DN80	DN50	2550	1600	2900	0.37
XBG-010	10	DN100	DN100	DN80	DN50	3350	1800	3000	0.37
XBG-015	15	DN100	DN100	DN80	DN50	3350	2000	3000	0.37
XBG-020	20	DN100	DN100	DN80	DN50	3500	2000	3000	0.37
XBG-030	30	DN150	DN150	DN80	DN50	4600	2000	3000	0.37
XBG-040	40	DN150	DN150	DN100	DN50	4000	2800	3000	0.37
XBG-050	50	DN200	DN200	DN100	DN50	4650	2800	3000	0.37
XBG-060	60	DN200	DN200	DN100	DN50	5000	2800	3000	0.37
XBG-070	70	DN250	DN200	DN100	DN50	6000	2800	3000	0.37*2
XBG-080	80	DN250	DN200	DN100	DN50	6800	2800	3000	0.37*2
XBG-100	100	DN250	DN250	DN100	DN50	7050	3000	3000	0.37*2

参数表说明 ▶
Selection Table Note

样本参数及图片仅供参考，源申公司保留持续改进的权利，所有参数以双方确认为准。如有任何技术问题，请与我们联系。
The Parameters and Pictures are only for reference. Yosun reserves all rights.All parameters are subject to the confirmation of both parties. More technical questions, please feel free to contact us.

兰美拉沉淀池外形图
Lamella Clarifier Outline Dimension

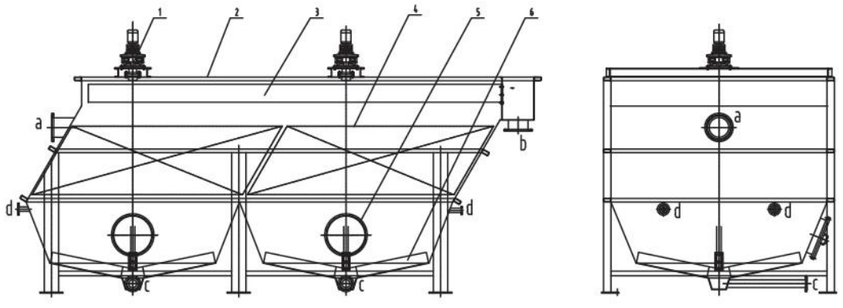

兰美拉斜板沉淀池外形图
Lamella Clarifier OutlineDimension

1. 刮泥机 1.Scraper Motor	2. 池体 2.Clarifier Tank	3. 出水渠 3.Outlet Channel	4. 斜板组件 4.Lamella Plate
5. 人孔口 5.Manhole	6. 刮渣装置 6.Sludge Scraper	a-进水管口 a-Inlet	b-出水管口 b-Outlet
c-污泥排放管口 c-Discharge	d-反冲洗管口 d-Backwashing		

源申环保 YOSUN ENVIRONMENTAL

Professional supplier of solid liquid separator for waste water treatment

中心传动式刮泥机
Center Drive Sludge Scraper

Professional design | Exquisite craftsmanship | Focus on separating

产品简介

中心传动式刮泥机是一种辐流式沉淀池的配套刮泥设备。辐流式沉淀池从中间进水，污泥沉降到池底，清水从顶部四周集中后排出。该设备通过中心驱动带动底部刮泥机构旋转，在旋转过程中将沉淀在池体底部的沉淀物集中至中间集中区域，再通过排泥口统一排出。中心传动刮泥机还有池体表面阻挡刮除浮渣的功能，该功能是选配。

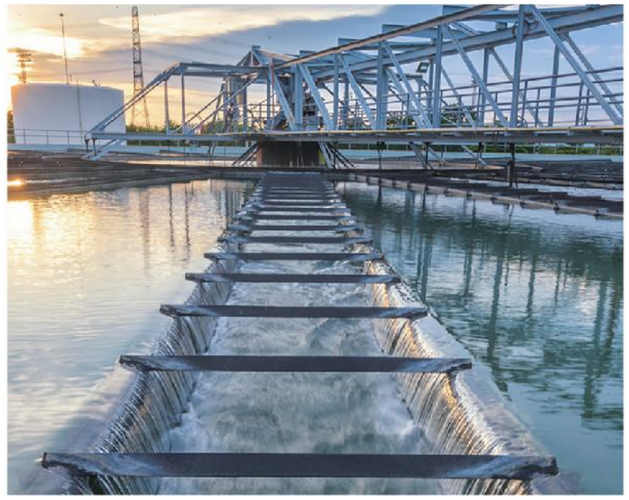

Sludge Scraper

Center drive sludge scraper is a supporting equipment of radial sedimentation clarifier.Water inflowing into the clarifier from the middle part, the sludge sinks to the bottom of the tank. Clean water flows out and the bottom sludge is scrapered to the pit and finally discharged. The central drive scraper also has the function of blocking and scraping the scum on the surface of the tank, which is optional.









源申环保
YOSUN ENVIRONMENTAL

Professional supplier of solid liquid separator for waste water treatment

Professional design　Exquisite craftsmanship　Focus on separating

构造以及工作过程

中心传动悬挂式刮泥机由工作桥、驱动装置、传动轴、刮臂及刮泥板、拉索、水下轴承、泥斗搅拌桨、稳流筒和系统控制柜等组件组成。

中心传动悬挂式刮泥机运行时，由安装在工作桥上的驱动装置驱动传动轴旋转，传动轴旋转时带动两侧刮臂绕池中心轴线旋转，安装在刮臂上的一组刮泥板在随刮臂旋转中，将沉降在底部的污泥刮向池中心集泥坑。同时，液面上的浮渣（如果有的话）由刮渣板和周边浮渣板形成的渐缩区域内集中，由浮渣刮耙扒到集渣斗并排出池外。

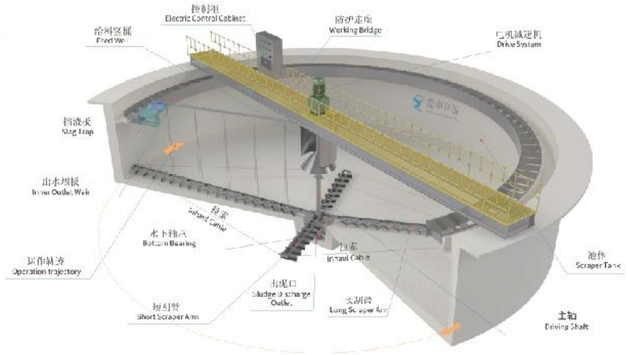

Working Process

Center drive sludge scraper is composed of working bridge, driving unit, driving shaft, scraper, inhaule cable, feed well and control system etc.

During running, driving unit installed on the bridge drives the shaft to rotate.When shaft rotating, scraper arms on both sides connected with the shaft will work meanwhile. The sludge at the bottom of the tank will be discharged by the scraper installed on the arms.At the same time, the scum (if any) on the liquid surface is concentrated in the tapered area formed by the scum scraping plate and the surrounding scum plate, and is scraped by the scum scraping rake to the sludge collecting bucket and discharged out of the tank.

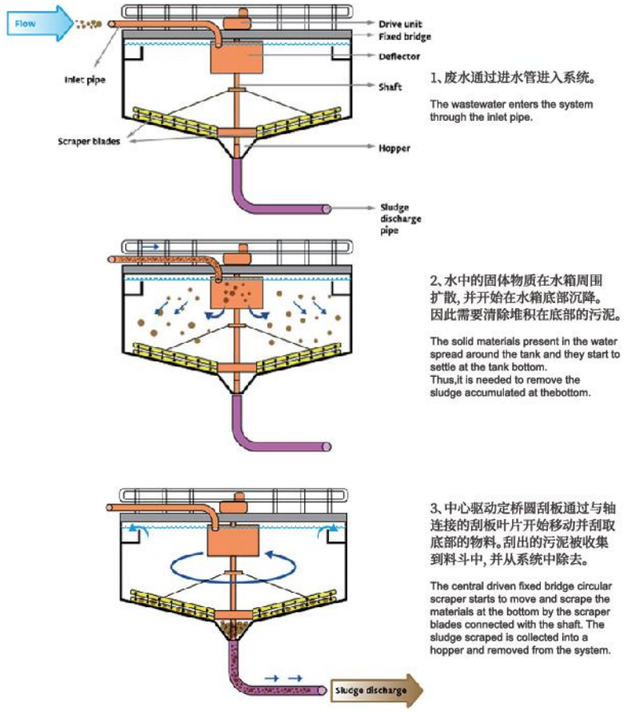

1、废水通过进水管进入系统。

The wastewater enters the system through the inlet pipe.

2、水中的固体物质在水箱周围扩散，并开始在水箱底部沉降。因此需要清除堆积在底部的污泥。

The solid materials present in the water spread around the tank and they start to settle at the tank bottom. Thus,it is needed to remove the sludge accumulated at thebottom.

3、中心驱动定桥圆刮板通过与轴连接的刮板叶片开始移动并刮取底部的物料。刮出的污泥被收集到料斗中，并从系统中除去。

The central driven fixed bridge circular scraper starts to move and scrape the materials at the bottom by the scraper blades connected with the shaft. The sludge scraped is collected into a hopper and removed from the system.

源申环保
YOSUN ENVIRONMENTAL

Professional supplier of solid liquid separator for waste water treatment

中心传动式刮泥机
Center Drive Sludge Scraper

Professional design　Exquisite craftsmanship　Focus on separating

产品优势

1. 工作桥采用桁架结构，简洁、美观、轻巧。
2. 维护简单方便，运行费用低。
3. 传动减速机多种选择：采用三级摆线减速机直接驱动，结构简单紧凑，检修方便；采用减速机、传递齿轮、回转轴承组合驱动，能获得极大的驱动扭矩，适用于重载场合。
4. 系统控制柜采用户外型，安全可靠，可随机控制和远程控制。
5. 设备的尺寸、材质及其他配置可根据用户需求而定。



Product Advantages

1. Concise, beautiful and light truss structure.
2. Easy maintenance and economical cost.
3. Multiple choices of transmission reducer: the three-stage cycloid reducer is directly driven, with simple and compact structure and convenient maintenance; It is driven by reducer, transmission gear and rotary bearing, which can obtain great driving torque and is suitable for heavy-duty occasions.
4. Outdoor-type control cabinet which is safe and reliable can be controlled randomly and remotely.
5. Size, material and other configurations of the equipment can be customized.







中心传动刮泥机技术参数表

Center Drive Sludge Scraper Outline Dimension

型号 Model	池径 Tank Diameter (m)	水深 Water Depth (m)	池深 Tank Depth (m)	周边线速度 Peripheral Linear Speed (m/min)	驱动功率 Power (kw)
ZXG4	4	2.8-3.6	3.2-4	1-2	0.55
ZXG5	5	2.9-3.6	3.3-4	1-2	0.55
ZXG6	6	3-3.6	3.4-4	1-2	0.55
ZXG7	7	3.1-3.6	3.5-4.2	1-2	0.55
ZXG8	8	3.2-4	3.6-4.4	1-2	0.55
ZXG9	9	3.4-4.2	3.8-4.6	1-2	0.55
ZXG10	10	3.6-4.4	4-4.8	1-2	0.55
ZXG11	11	3.6-4.4	4-4.8	1-2	0.55
ZXG12	12	3.6-4.4	4-4.8	1-2	0.55
ZXG13	13	3.6-4.4	4-4.8	1-2	0.55
ZXG14	14	3.6-4.4	4-4.8	1-2	0.55
ZXG15	15	3.6-4.4	4-4.8	1-2	0.55
ZXG16	16	3.6-4.4	4-4.8	1-2	0.55

参数表说明 ▶
Selection Table Note

样本参数及图片仅供参考，源申公司保留持续改进的权利，所有参数以双方确认为准。如有任何技问题，请与我们联系。
The Parameters and Pictures are only for reference. Yosun reserves all rights.All parameters are subject to the confirmation of both parties. More technical questions, please feel free to contact us.

中心传动式刮泥机外形图

Center Drive Sludge Scraper Outline Dimension

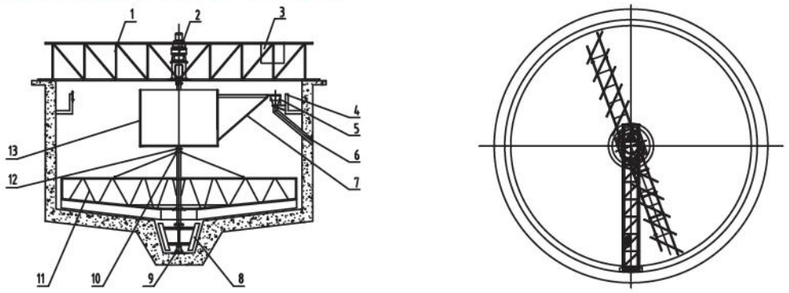

中心传动式刮泥机外形图
Center drive sludge scraper

1. 工作桥 1.Working bridge	2. 驱动系统 2.drive system	3. 系统控制柜 3.Electric control cabinet	4. 出水堰板 4.outlet weir plate
5. 挡渣板 5.scum baffle	6.出渣管 6.Slag discharge pipe	7. 撇渣机构 1.Skimmer	8. 污泥斗搅拌桨 8.Mixing puddle for bottom sludge collector
9. 水下轴承 9.Underwater bearings	10. 拉索 10.inhaul cable	11. 刮臂及刮泥板 11.rake arm and sludge scraper	12. 传动轴 12.Drive shaft
13. 稳流桶 13.feed well			

源申环保
YOSUN ENVIRONMENTAL

Professional supplier of solid liquid separator for waste water treatment

DL叠螺式污泥脱水机
DL Volute Sludge Dewatering Machine

Professional design　Exquisite craftsmanship　Focus on separating

产品简介

叠螺式污泥脱水机源于国外先进技术，后引进国内实现国产化。叠螺污泥脱水机巧妙运用自动更新滤饼过滤技术代替了传统滤筛过滤，自身更新滤饼过滤技术确保脱水机连续稳定的泥水分离效果，通过螺杆直径和螺距变化产生的强大挤压力，以及游动环与固定环之间的微小缝隙，实现对污泥进行挤压脱水，是一种新型的固液分离设备。









DL Volute Sludge Dewatering Machine

Screw sludge dewatering machine, originating from the advanced technology of foreign countries, is introduced into China to realize localization. The automatic renewal filtration technology is cleverly used in the sludge dewatering machine to replace the traditional filter screen filtration. The self-renewal filtration technology ensures that dewatering machine can separate sludge from sewage water stably. It is a new solid-liquid separation equipment to extrude and dehydrate the sludge through the strong extrusion pressure caused by the change of screw diameter and pitch, as well as the small gap between the floating ring and the fixed ring.

源申环保
YOSUN ENVIRONMENTAL

Professional supplier of solid liquid separator for waste water treatment

Professional design　Exquisite craftsmanship　Focus on separating

构造以及工作过程

叠螺污泥脱水机由叠螺体、驱动装置、滤液槽、混合系统、架体等组成。

叠螺污泥脱水机工作时，通过污泥泵将污泥提升至混合槽后，此时，加药泵也定量地对混合槽输送药液，搅拌电机带动整个搅拌系统将污泥与药液进行充分混合，从而产生矾花，当液位达到液位传感器上位时，此时液位传感器得到信号，使得叠螺主体电机工作，从而开始压滤流入至叠螺主体内污泥，在螺旋轴的作用下，将污泥一步一步提升至污泥出口，滤液则从固定环和游动环之间的间隙中流出来。





1. 污泥进入口Sludge inlet port
2. 污泥回流管Return sludge flow

※水箱中的污泥如果超过限位就会通过管子回流出来。

※If the sludge in the tank of sewage outlet exceeds the limit It comes back out through a tube.

3. 污泥溢流口Sludge overflow port.
4. 添加聚合物Addition of polymer.
5. 喷淋器Spray thrower.
6. 泥饼排放口Mud cake outlet.
7. 污水排放口Sewage discharge outlet.

污水 Sewage
污水混合聚合物 Sewage mixed polymer
污泥 Sludge
泥饼 Mud cake

Working Process

Screw press is composed of Screw body, Driving motor system, Inlet mixing system, Collection water tank, Back-washing system, etc.

When running, the sludge is lifted to the mixing tank through the sludge pump and meanwhile the dosing pump quantitatively transports chemical to the mixing tank. The Agitator drives to mix the sludge and the chemical agent to generate alum. When the liquid level reaches the upper position of the liquid level sensor,then it gets the signal which makes the screw press main motors work. After that, screw press starts to press and filtrate the sludge water flowing into the screw body. Under the working of spiral shaft, the sludge is lifted to outlet step by step, with filtration water flowing out from the gap between fixed rings and moving rings.

源申环保
YOSUN ENVIRONMENTAL

Professional supplier of solid liquid separator for waste water treatment

DL叠螺式污泥脱水机
DL Volute Sludge Dewatering Machine

Professional design　Exquisite craftsmanship　Focus on separating

产品优势

1. 使用广泛：各行业的污泥脱水；
2. 不易堵塞：独特的动、静环滤缝结构设备不易堵塞；
3. 连续自动运行：24小时可以连续无人运行；
4. 节省运行成本：一体化设计，设计紧凑，大幅度节省运行费用；24小时全自动无人运行，人工费大幅度降低；设备占地面积小，降低土建投资；
5. 轻巧耐用：机体几乎全部采用不锈钢材质，更换部件只有螺旋轴和游动环，使用寿命长，经久用；

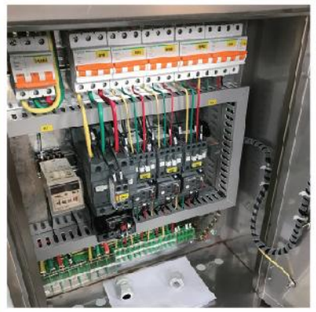







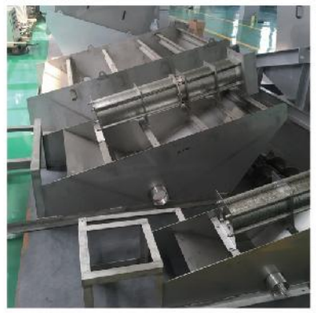



Product Advantages

1. Widely used:sludge dewatering in different fields.
2. Not easy to block: unique moving and fixed structures.
3. Continuous auto operation: 24 hours continuous unmanned operation.
4. Saving cost: Compact design, unmanned operation and small floor space.
5. Durable and long service life: stainless steel structure.

DL叠螺污泥脱水机外形尺寸表

DL Sludge dewatering machine Model Selection Table:

型号 Model	处理能力 (kg-DS/h)	螺旋轴规格 Spiral Diameter (mm)	泥饼排出口离地面距离 Discharge Distance (mm)	尺寸 Dimension(mm) L	W	H	设备重量 Net Weight (kw)	运行重量 Operating Weight (kg)	功率 Power (kw)
DL131	4～14	¢130*1	340	2041	636	1006	240	330	0.4
DL132	8～28	¢130*2	302	2139	886	1006	330	480	0.6
DL201	8～20	¢200*1	432	2434	768	1307	400	650	0.57
DL202	16～40	¢200*2	433	2484	914	1307	560	760	0.94
DL203	24～60	¢200*3	433	2586	1244	1527	850	1050	1.51
DL251	12～25	¢250*1	474	2593	768	1569	450	700	0.57
DL253	24～75	¢250*3	433	2836	1244	1527	1370	1570	1.51
DL301	20～70	¢300*1	568	3138	969	1821	860	1250	0.95
DL301L	20～70	¢300*1	638	3324	710	1659	860	1250	1.5
DL302	40～140	¢300*2	523	3334	1162	1608	1300	1900	1.65
DL302L	40～140	¢300*2	555	3531	1100	1872	1400	2000	1.65
DL303	60～210	¢300*3	560	3477	1605	1821	1700	2600	2.2
DL304	90～280	¢300*4	504	3736	2030	1816	2050	2950	2.95
DL351	40～120	¢350*1	676	3819	1000	2179	1500	2480	1.65
DL352	80～240	¢350*2	657	3919	1375	2179	2950	4500	2.75
DL353	120～360	¢350*3	658	4120	1905	2181	4350	6750	4.05
DL401	67.5～160	¢400*1	676	3819	1000	2179	1950	2900	1.65
DL402	135～320	¢400*2	657	3919	1375	2179	3300	4900	2.75
DL402L	135～320	¢400*2	687	4787	1430	2458	3500	5100	3.55
DL403	200～480	¢400*3	658	4120	1905	2181	4350	6750	4.05
DL403L	200～480	¢400*3	686	5206	2040	2458	4550	6950	5.6
DL404	266～640	¢400*4	657	3919	2760	2179	5450	7650	5.5
DL404L	266～640	¢400*4	686	5206	2620	2458	4550	6950	7.5

参数表说明 ▶
Selection Table Note

样本参数及图片仅供参考，源申公司保留持续改进的权利，所有参数以双方确认为准。如有任何技术问题，请与我们联系。
The Parameters and Pictures are only for reference. Yosun reserves all rights.All parameters are subject to the confirmation of both parties. More technical questions, please feel free to contact us.

DL叠螺污泥脱水机外形图

DL Sludge Dewatering Machine Outline Dimension

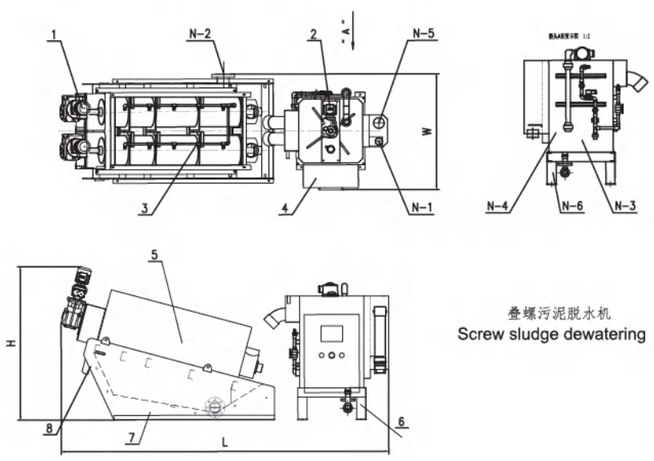

叠螺污泥脱水机
Screw sludge dewatering

1. 电机1.Motor
2. 絮凝混合搅拌机2.Flocculation mixer
3. 叠螺主体3.Screw body
4. 电控柜4.Electric control cabinet
5. 边盖5.Side cover
6. 絮凝混合槽底座6.Base of flocculation mixing tank
7. 叠螺主体底座7.Screw body base
8. 泥饼排出口8.Dry Sludge outlet
N-1. 污泥输送口N-1.Sewage inlet
N-2. 滤液排出口N-2.Filtration discharge
N-3. 供水口N-3.Feed water inlet
N-4. 药液输送口N-4.Chemical dosing inlet
N-5. 回流口N-5.Returning pipeline
N-6. 混合槽排空口N-6.Vent of mixing tank

源申环保
YOSUN ENVIRONMENTAL

Professional supplier of solid liquid separator for waste water treatment

加药装置
Chemical Dosing System

Professional design　Exquisite craftsmanship　Focus on separating

产品简介

加药装置是污水处理设备中投加药剂的重要设备。加药装置的形式是多种多样的，可根据药剂的性质、投加量、用户实际情况和预算分为多种形式，在材质上，也有碳钢、不锈钢、PE、PP、U-PVC等多种材质可选。



Dosing System

Automatic Polymer preparation unit is an important dosing machine in wastewater treatment. There are different kinds of dosing machine which is choosen according to the nature of agent, dosage,- client's requirments and budget. In terms of materials, carbon steel, stainless steel, PE, PP, U-PVC and other materials are also available.





源申环保
YOSUN ENVIRONMENTAL

Professional supplier of solid liquid separator for waste water treatment

Professional design　Exquisite craftsmanship　Focus on separating

构造以及工作过程

加药装置大致可以分为溶药、储存、投加等几个部分，其中溶药装置根据药剂的性质进行配置，储药部分则根据药剂制备后的存放时效以及用户的实际使用排班等情况决定，投加部分根据工艺中的投加量、投加压力、药剂性质以及投加精度等参数进行选择。





Working Process

The dosing system can be roughly divided into several parts, such as dissolving, storage and dosing. The dissolving device is configured according to the nature of the drug, and the storage part is configured according to the storage time after the preparation of the drug and the user's actual use and shift arrangement, and the dosing part is selected according to the parameters such as dosing amount, dosing pressure, agent property and dosing accuracy in the process.

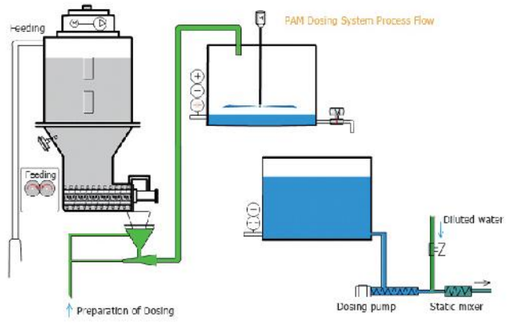

源申环保
YOSUN ENVIRONMENTAL

Professional supplier of solid liquid separator for waste water treatment

加药装置
Chemical Dosing System

Professional design　Exquisite craftsmanship　Focus on separating

产品优势

1. 非标定制可以根据用户实际情况来选择合适的型号。
2. 可实现全自动溶药、熟化、投加。
3. 精确计算药剂溶解量、药剂熟化时间等参数，提高使用效率。
4. 投加精度高、投加点精准，为用户节约成本。
5. 可以设置报警系统，设备故障报警，在无药的情况提前预警。
6. 材质多样性可选择：碳钢、不锈钢、PP、PE、U-PVC等。







Product Advantages

1. Non standard customization to meet the actual situation of the user.
2. Fully automatic dissolution, curing and dosing.
3. Accurately calculate the dissolution amount of the agent and the aging time of the agent to improve the use efficiency.
4. High dosing accuracy and precise dosing point, saving cost for users.
5. An alarm system can be set to alarm equipment failure and give early warning in case of no medicine.
6. Material diversity: carbon steel, stainless steel, PP, PE, U-PVC, etc.



加药装置尺寸表 ›

Chemical Dosing System Model Selection Table

型号 Model	配置加量 (L/h)	有效容积 (L)	进水管径 Inlet Pipe	加药管径 Dosing Pipe	放空管径 Vent Pipe	溢流管径 Overflow	尺寸 Dimension(mm) L	W	H	重量 Weight (kg)	干粉输送机 (kg)	搅拌机 (kw)	总功率 Power (kw)
PT500	500	500	DN20	DN20	DN20	DN20	1500	1140	1521	250	0.18	0.37	0.92
PT1000	1000	1000	DN20	DN20	DN20	DN20	2000	1390	1771	505	0.25	0.55	1.35
PT1500	1500	1500	DN20	DN20	DN20	DN20	2000	1390	1771	505	0.25	0.55	1.35
PT2000	2000	2000	DN20	DN25	DN25	DN25	2000	1650	1991	615	0.25	0.55	1.35
PT3000	3000	3000	DN25	DN32	DN32	DN32	2440	1650	1991	685	0.25	0.55	1.35
PT4000	4000	4000	DN25	DN32	DN32	DN32	2550	2010	2136	820	0.25	1.1	3.55
PT5000	5000	5000	DN32	DN40	DN40	DN40	3000	2010	2136	950	0.37	1.1	3.67
PT6000	6000	6000	DN32	DN40	DN40	DN40	3500	2010	2186	1250	0.37	1.1	3.67

参数表说明 ▶

Selection Table Note

样本参数及图片仅供参考，源申公司保留持续改进的权利，所有参数以双方确认为准。如有任何技术问题，请与我们联系。

The Parameters and Pictures are only for reference. Yosun reserves all rights.All parameters are subject to the confirmation of both parties. More technical questions, please feel free to contact us.

加药装置外形图 ›

Chemical Dosing System Outline Dimension

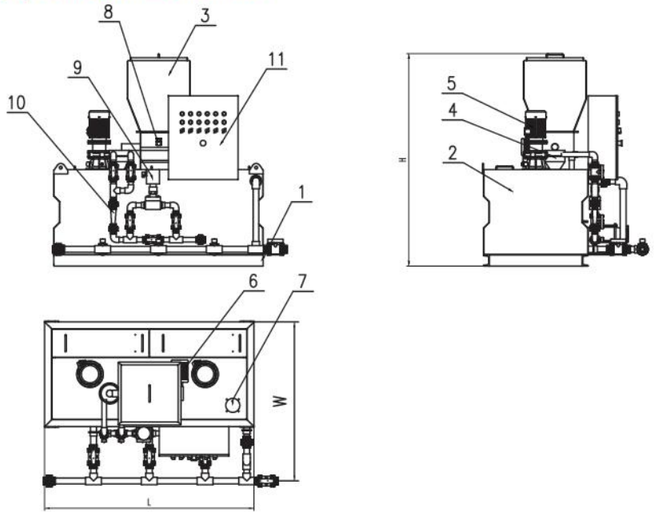

加药装置外形图

Chemical Dosing System

1. 底架 1.Bottom frame	2. 泡药箱 2.Polymer preparation tank	3. 干粉箱 3.Dry powder dosing tank	4. 速溶器 4.Heating machine
5. 搅拌电机 5.Mixing motor	6. 螺旋给料电机 6.Screw feeding motor	7. 液位开关 7.Liquid level switch	8. 震动马达 8.Vibration motor
9. 电磁阀 9.Solenoid valve	10. 流量计 10.Flow meter	11. 电控柜 11.Electric control cabinet	